网站图纸

RoHS Compliant

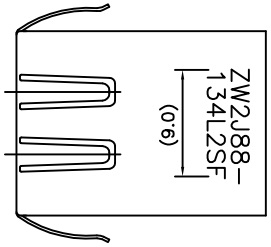

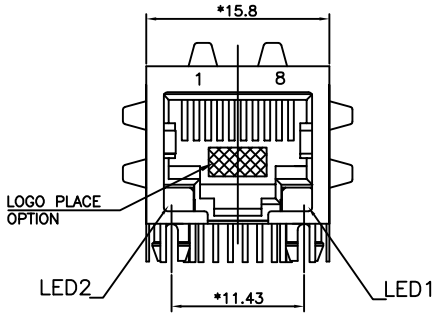

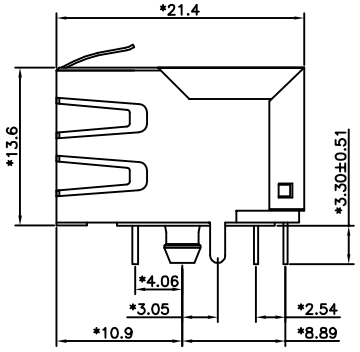

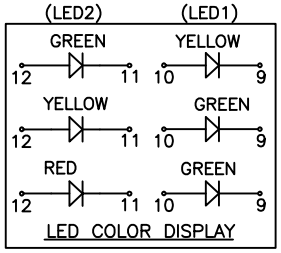

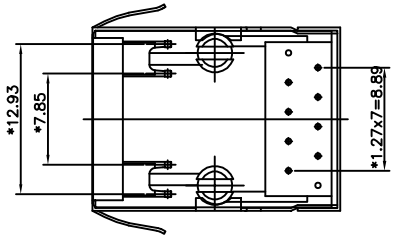

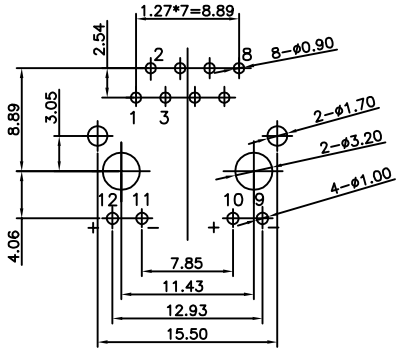

PC Board Layout Component Side Shown
PC Board =1.60 mm

NOTES:

ELECTRICAL:
1. VOLTAGE RATING : 125 VAC RMS .
2. CURRENT RATING : 1.5 AMP .
3. CONTACT RESISTANCE : 45 MILLIOHMS MAX.
4. INSULATION RESISTANCE: 1000 MEGOHMS MIN @ 500 VDC.
5. DIELECTRIC STRENGTH : 1000 VDC RMS 60Hz, 1MIN.

MECHANICAL:
1. HOUSING MATERIAL : PBT OR NYLON UL94V-0./COLOR:BLACK.
2. CONTACT MATERIAL : PHOSPHOR BRONZE ø0.46mm.
3. PLATING : GOLD PLATING OVER NICKEL.
4. OPERATING LIFE : 750 CYCLES MIN.
5. PCB RETENTION PRE-SOLDER : 1 LB MIN.
6. PCB RETENTION POST-SOLDER: 10 LBS MIN.

ENVIRONMENTAL:
1. STORAGE : -40°C TO +85°C.
2. OPERATION: -40°C TO +85°C.
3. WAVE SOLDERING TEMPERRATURE: 230~240°C(3~5 SECONDS)-PBT.
   WAVE SOLDERING TEMPERRATURE: 250~260°C(5~10 SECONDS)-NYLON.
4. RoHS COMPLIANT.

MATES WITH MODULAR PLUG CONFORMING TO
FCC PART 68, SUBPART F.
CUL FILE NO. E345295
TOP-LEVEL-ASSEMBLY APPEARANCE QUALITY AND OTHERS ACCORDING
TO QAIP-008 IF NOTHING ELSE IS SPECIFIED.
PART NUMBER: ZW2J88-XXXLXSX

0-W/O LOGO
1-W/ "ZSNOW" LOGO
2-W/ "F" LOGO

1-3u", 2-6u", 3-15u"
4-30u" 5-50u" F-GOLD FLASH

2-PBT
J-NYLON

1-W/O TAB
2-W/ TOP TABS
4-W/ TOP&SIDE TABS

1-LED1:GREEN LED2:YELLOW
2-LED1:GREEN LED2:GREEN
3-LED1:YELLOW LED2:GREEN
E-LED1:GREEN LED2:RED
N-LED1:G+Y LED2:GREEN
K-LED1:GREEN LED2:G+Y

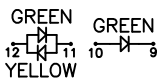

FOR P/N:ZW2J88-XKXLXSX

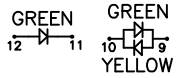

FOR P/N:ZW2J88-XNXLXSX

QC :Inspection Item	DIMENSION IN mm [Inch]	ZSNOW	ZSNOW ELECTRONIC CO., LTD
	TOLERANCE UNLESS OTHERWISE SPECIFIED	PART NUMBER: ZW2J88-XXXLXSX	DRAWING NUMBER: ZW2J88-XXXLXSX
	.X± 0.30 / X.°± 2.0°	TITLE: SIDE ENTRY LED JACK	
	.XX± 0.20 / .X°± 1.0°		
	.XXX± 0.10		
	APPROVE: TIMLEE 12/14/09' / CHECK: ZERO 12/14/09'	DRAW: SAMMY 12/14/09'	PROJ. / SHEET 1 OF 1 / SCALE 3 : 1 / SIZE A4 / REV P7

THIS INFORMATION IS CONFIDENTIAL AND IS DISCLOSED TO YOU ON CONDITION THAT NO FURTHER DISCLOSURE IS MADE BY YOU TO OTHER THAN ZSNOW ELECTRONICS PERSONNEL WITHOUT WRITTEN AUTHORIZATION FROM MINGBO ZSNOW ELECTRONICS CO.,LTD.