网站图纸

RoHS Compliant

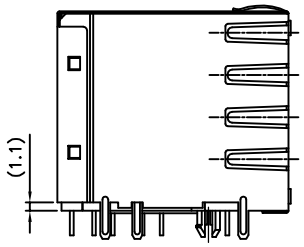

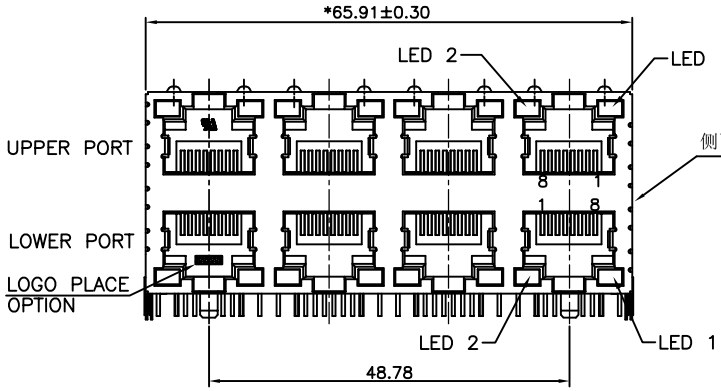

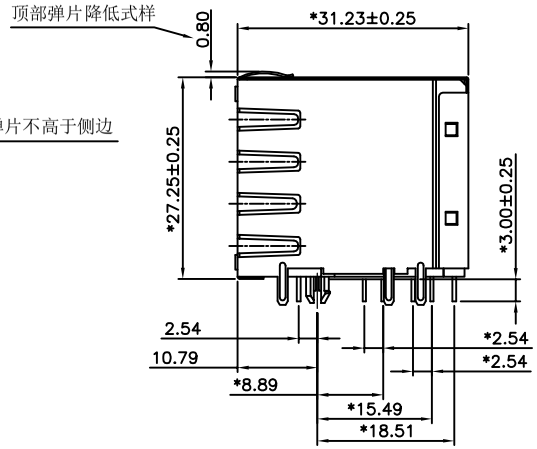

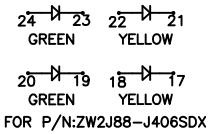

NOTES:

ELECTRICAL:

1. VOLTAGE RATING : 125 VAC RMS.
2. CURRENT RATING : 1.5 AMP.
3. CONTACT RESISTANCE : 60 MILLIOHMS MAX.
4. INSULATION RESISTANCE : 1000 MEGOHMS MIN @ 500 VDC.
5. DIELECTRIC STRENGTH : 1000 VDC RMS 60Hz, 1MIN.

MECHANICAL:

1. HOUSING MATERIAL : PBT UL94V-0./COLOR:BLACK.
2. CONTACT MATERIAL : PHOSPHOR BRONZE ø0.46mm.
3. PLATING : GOLD PLATING OVER NICKEL.
4. OPERATING LIFE : 750 CYCLES MIN.
5. PCB RETENTION PRE-SOLDER : 1 LB MIN.
6. PCB RETENTION POST-SOLDER: 10 LBS MIN.

ENVIRONMENTAL:

1. STORAGE : -40°C TO +85°C.
2. OPERATION: -40°C TO +85°C.
3. WAVE SOLDERING TEMPERRATURE: 230~240°C(3~5 SECONDS).
4. RoHS COMPLIANT.

MATES WITH MODULAR PLUG CONFORMING TO FCC PART 68, SUBPART F.

CUL FILE NO. E345295

PART NUMBER: ZW2J88-J4XXSDX

- Gold Thickness:
  1-3u" 2-6u" 3-15u"
  4-30u" 5-50u" F-GOLD FLASH
- 06-W/ ZSNOW LOGO,LEFT LED:GREEN, RIGHT LED:YELLOW

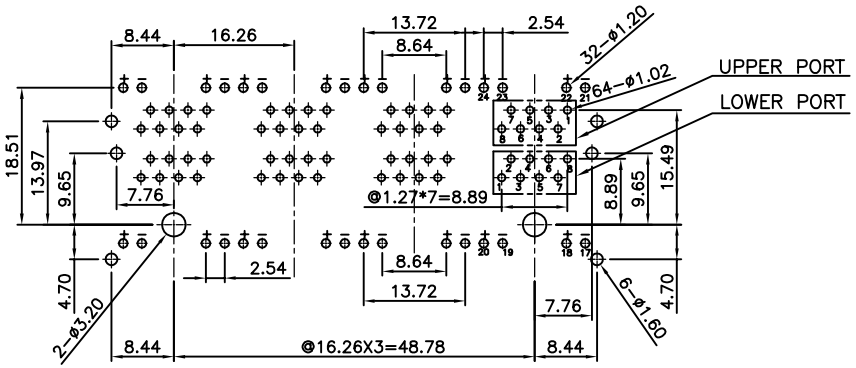

PC Board Layout Component Side Shown
PC Board Thickness=1.6mm PCB TOLERANCE:±0.05

QC : Inspection Item	DIMENSION IN mm [Inch]	ZSNOW	ZSNOW ELECTRONIC CO., LTD
	TOLERANCE UNLESS OTHERWISE SPECIFIED	PART NUMBER: SEE NOTE	DRAWING NUMBER: ZW2J8X-J4XXSDX-5
	.X± 0.30 / X.°± 2.0°		
	.XX± 0.20 / .X°± 1.0°	TITLE: RJ45(LED) STACKED GANGED JACK, 2X4	
	.XXX± 0.10		
	APPROVE: TIMLEE 09/11/19' / CHECK: ZERO 09/11/19'	DRAW: HAPPY 09/11/19'	PROJ. / SHEET 1 OF 1 / SCALE 3 : 2 / SIZE A3 / REV P1

THIS INFORMATION IS CONFIDENTIAL AND IS DISCLOSED TO YOU ON CONDITION THAT NO FURTHER DISCLOSURE IS MADE BY YOU TO OTHER THAN ZSNOW ELECTRONICS PERSONNEL WITHOUT WRITTEN AUTHORIZATION FROM NING80 ZSNOW ELECTRONICS CO.,LTD.